Seats and benches

www.rubaek.dk | Tel +45 47 17 28 00

Joca-Rubæk
PART OF Sulo GROUP

Contents

Traditional - Recycled Material Seating	3-13
Traditional - FSC® Certified Hardwood Seating	14-17
Contemporary Seating	18-21
Children's Seating	22-24
Materials & Further Information	25-27
Commemorative Plaques & Personalisation	28-29
Photo Gallery	30-31

Design Process

From ideas ... to real world solutions

New product development has been a defining element throughout our history.

The nature of our products is such that they must be designed to resist the numerous challenges faced within the urban landscape.

We continuously enhance our product range and pave the way in the market by introducing unique products.

Working together with our innovative design team, we want to provide real world solutions, tailored to meeting your needs.

We offer a large range of traditional and contemporary seats and benches to provide comfortable seating in any public space.

These seats and benches are low-maintenance, weather and vandal resistant and suitable for use both indoors and outdoors.

They are available in different materials, from plastics, recycled material, steel and FSC® certified hardwood.

Visit our website

www.glasdon.com

Traditional
Recycled Material Seating

Our Recycled Material Seating range offers an environmentally friendly, sustainable outdoor seating solution.

These seats and benches come in a variety of styles from British heritage to match traditional cast-iron street furniture, to wood-look benches to suit natural green spaces and modern contemporary open spaces.

Elwood™ Seat

DESIGN FEATURES

- Environmentally friendly recycled materials.
- Unique, realistic timber-grain finish.
- Vandal and weather resistant.
- Nine colour combination options.
- Co-ordinates with other Glasdon street furniture.

MATERIAL & COLOUR OPTIONS

Slats: Black Enviropol® material, Brown Enviropol material, Timberpol® material.
Seat Ends: Everwood™ material in Black Oak, Dark Oak, Light Oak.
Frame: Mild Steel with an Armortec® corrosion resistant coating.

SPECIFICATIONS

Length:	1985mm
Overall Depth:	675mm
Seat Depth:	440mm
Seat Height:	470mm
Overall Height:	915mm
Total seat weight including:	
Enviropol slats:	75kg (ground fixed)
	155kg (ballasted)
Timberpol slats:	85kg (ground fixed)
	165kg (ballasted)

Supplied fully assembled for immediate use.

FIXING OPTIONS

We strongly recommend ground fixing for safety and security.
Surface fixing bolts and tamper-resistant cover caps supplied as standard.
Concrete ballasting is also available. Suitable mechanical lifting equipment is required to move the ballasted seat into position.
Optional kit available for fixing to below-ground concrete foundations.

Phoenix® Seat

DESIGN FEATURES

- Environmentally friendly recycled materials.
- Vandal-resistant robust design.
- Never needs painting.
- Superb strength.
- Minimum maintenance - needs no surface treatment.
- Weather-resistant - will not rot.
- Available with armrests.
- Co-ordinates with other Glasdon street furniture.

MATERIAL & COLOUR OPTIONS

Slats: Black Enviropol® material, Brown Enviropol material, Timberpol® material.
Seat Ends and Armrests: Black Enviropol material.

SPECIFICATIONS

Length:	1790mm
Seat Height:	428mm
Depth:	574mm
Overall Height:	702mm
Total seat weight including:	
Enviropol slats:	75kg
Enviropol slats:	90kg c/w 2 armrests
Timberpol slats:	80kg
Timberpol slats:	95kg c/w 2 armrests

Supplied fully assembled for immediate use or in flat-pack form.

Phoenix Seat with Armrests also available

FIXING OPTIONS

We strongly recommend ground fixing for safety and security.
Surface fixing bolts supplied as standard.
Optional kits are available for fixing to paving slabs or to suit below-ground concrete foundations.
Tamper-resistant cover caps are also available.

Phoenix Jubilee™ Seat

DESIGN FEATURES

- Environmentally friendly recycled materials.
- Vandal-resistant robust design.
- Never needs painting.
- Superb strength.
- Minimum maintenance - needs no surface treatment.
- Weather-resistant - will not rot.
- Long-lasting.
- Co-ordinates with other Glasdon street furniture.

MATERIAL & COLOUR OPTIONS

Slats: Black Enviropol® material, Brown Enviropol material, Timberpol® material.
Seat Ends: Black Enviropol material.
Frame: Steel with Armortec® coating

SPECIFICATIONS

Length: 1970mm
Depth: 780mm
Seat Height: 460mm
Overall Height: 880mm
Total seat weight including:
Enviropol slats: 115kg
Timberpol slats: 119kg
Supplied fully assembled for immediate use.

FIXING OPTIONS

We strongly recommend ground fixing for safety and security.
Surface fixing bolts supplied as standard.
Optional kits are available for fixing to paving slabs or to suit below-ground concrete foundations.
Tamper-resistant cover caps are also available.

Stanford™ Seat & Bench

DESIGN FEATURES

- 100% recycled aluminium seat ends.
- Traditional styling.
- Rigid steel frame.
- Vandal-resistant, robust design.
- Tamper-resistant construction.
- Minimum maintenance.
- Weather-resistant materials.
- Co-ordinates with other Glasdon street furniture.

MATERIAL & COLOUR OPTIONS

Slats: Black Enviropol® material, Brown Enviropol material, Timberpol® material.
Seat Ends: 100% recycled cast aluminium.
Frame: Steel with Armortec® coating.

SPECIFICATIONS

	Seat	Bench
Length:	1875mm	1891mm
Depth:	715mm	645mm
Seat Height:	439mm	468mm
Overall Height:	864mm	620mm
Total weight including:		
Enviropol slats:	96kg	78kg
Timberpol slats:	108.5kg	85kg

Supplied fully assembled for immediate use.

Stanford™ Bench

FIXING OPTIONS

We strongly recommend ground fixing for safety and security.
Surface fixing bolts and tamper-resistant cover caps supplied as standard.
Optional kits are available for fixing to paving slabs or to suit below-ground concrete foundations.

Lowther™ Seat

DESIGN FEATURES

- Cost effective heritage seat.
- Recycled cast aluminium seat ends with Armortec® coating.
- Rigid L-shaped steel support frame (not applicable to models purchased with Vandalex® material slats).
- Vandal-resistant, robust design.
- Minimum maintenance.
- Weather-resistant materials.
- Large selection of slat colours/finishes.
- Co-ordinates with other Glasdon street furniture.

MATERIAL & COLOUR OPTIONS

Seat Ends: Recycled cast aluminium with Armortec coating.
Frame: Mild Steel with Armortec coating.
Slats: Timberpol® material, Brown Enviropol® material, Black Enviropol material, or Vandalex material in Black, Silver, Dark Wood, Light Wood.

FIXING OPTIONS

We strongly recommend ground fixing for safety and security.
Surface fixing bolts and tamper-resistant cover caps supplied as standard.
Optional kits are available for fixing to paving slabs or to suit below-ground concrete foundations.

SPECIFICATIONS

	Enviropol/Timberpol Material	Vandalex Material
Length:	1903mm	1895mm
Depth:	584mm	584mm
Seat Height:	430mm	429mm
Overall Height:	830mm	830mm
Total weight including:		
Enviropol slats:	65kg	-
Timberpol slats:	75kg	-
Vandalex slats:	-	42kg

Supplied fully assembled for immediate use.

Clifton™ Picnic Table

DESIGN FEATURES

- Environmentally friendly recycled materials.
- Vandal-resistant robust design.
- Never needs painting.
- Superb strength.
- Minimum maintenance - needs no surface treatment.
- Weather-resistant - will not rot.
- Long-lasting.
- Co-ordinates with other Glasdon street furniture.
- Optional parasol hole available.

MATERIAL & COLOUR OPTIONS

Slats: Black Enviropol® material, Brown Enviropol material, Timberpol® material.
Frame: Black or Brown Enviropol material.

SPECIFICATIONS

	Clifton Picnic Table	Wheelchair Access Option
Overall Length:	1790mm	1790mm
Seat Length:	1790mm	1450mm
Height:	768mm	768mm
Seat Height:	458mm	458mm
Depth:	1310mm	1310mm
Total weight including:		
Enviropol slats:	140kg	131kg
Timberpol slats:	150kg	140kg

Both options supplied fully assembled for immediate use. Clifton Picnic Table can also be supplied in flat-pack form (this does not include the wheelchair access model).

Wheelchair access model

FIXING OPTIONS

We strongly recommend ground fixing for safety and security.
Optional surface fixing kit is available for securing to a flat, level concrete base or to paving slabs (supplied as standard with the wheelchair access version).
Tamper-resistant cover caps are also available.

Vandalex model

Bowland™ Picnic Table

DESIGN FEATURES

- Environmentally friendly recycled materials.
- Easy seating access for 6-8 people.
- Rounded slats on all edges for safety and comfort.
- Vandal-resistant robust design.
- Superb strength.
- Large selection of slat colours/finishes.
- Slats require minimal maintenance – and need no surface treatment.
- Weather-resistant – will not rot.
- Long lasting.
- Optional parasol hole*
- Wheelchair access model available with Enviropol® material slats only.

* (Available for Enviropol and Timberpol slat models only.

MATERIAL & COLOUR OPTIONS

Frame: Armortec® coated mild steel
Slats: Black Enviropol material, Brown Enviropol material, Timberpol material or Vandalex® material in Black, Silver, Dark Wood, Light Wood.

SPECIFICATIONS

	Bowland Picnic Table	Wheelchair Access Option
Maximum Length:	1790mm	1900mm
Seat Length:	1790mm	1488mm
Depth:	1318mm	1318mm
Seat Height:	458mm	458mm
Overall Height:	758mm	758mm
Total weight including:		
Enviropol slats:	114kg	106kg
Timberpol slats:	124kg	-
Vandalex slats:	60kg	-

Supplied fully assembled for immediate use.

Wheelchair access model

FIXING OPTIONS

Please note the Bowland Picnic Table must be securely bolted down for safety and security.
Self-tapping anchor bolts supplied as standard for fixing onto concrete or paving slabs.
Tamper resistant cover caps are also available.

Pembridge™ Picnic Table

DESIGN FEATURES

- Environmentally friendly recycled materials.
- Easy seating access for up to 8 people.
- Rounded slats on all edges for safety and comfort.
- Vandal-resistant robust design.
- Never needs painting.
- Superb strength.
- Minimal maintenance – needs no surface treatment.
- Weather-resistant – will not rot.
- Long lasting.
- Optional parasol hole available.

MATERIAL & COLOUR OPTIONS

Slats: Black Enviropol® material, Brown Enviropol material, Timberpol® material.
Frame: Black or Brown Enviropol material.

SPECIFICATIONS

	Pembridge Picnic Table	Wheelchair Access Option
Length:	1800mm	1800mm
Depth:	1800mm	1800mm
Seat Height:	450mm	450mm
Overall Height:	764mm	764mm
Total weight including:		
Enviropol slats:	180kg	160kg
Timberpol slats:	196kg	176kg
Total weight including delivery pallet:		
Enviropol slats:	230kg	210kg
Timberpol slats:	246kg	226kg

Delivered part assembled ready for self assembly.
Suitable mechanical lifting equipment is advised.
Safe manual handling also required.

Wheelchair access model

FIXING OPTIONS

We strongly recommend ground fixing for safety and security.
Self-tapping anchor bolts supplied as standard for fixing onto concrete or paving slabs.
Tamper resistant cover caps are also available.

Fusion™ Seat & Bench

Fusion™ Bench

DESIGN FEATURES

- Vandalex® material slats available in four paint finishes.
- Fire-resistant.
- 100% recycled material slats.
- Vandal-resistant, robust design.
- Minimum maintenance.
- Weather-resistant materials.

MATERIAL & COLOUR OPTIONS

Slats: Vandalex material in Black, Silver, Dark Wood, Light Wood.
Frame: Black Steel with Armortec® coating.

SPECIFICATIONS

	Seat	Bench
Length:	1800mm	1800mm
Depth:	585mm	310mm
Seat Height:	430mm	425mm
Overall Height:	775mm	425mm
Weight:	33kg	19kg

Supplied fully assembled for immediate use.

FIXING OPTIONS

We strongly recommend ground fixing for safety and security.
Optional kits are available for surface fixing to concrete and paving slabs or to suit below-ground concrete foundations.
Tamper-resistant cover caps are also available.

Countryside™ Seat & Bench

DESIGN FEATURES

- Environmentally friendly recycled materials.
- Vandal-resistant robust design.
- Never needs painting.
- Weather-resistant - will not rot.
- Choice of three slat options.

MATERIAL & COLOUR OPTIONS

Slats: Black Enviropol® material, Brown Enviropol material, Timberpol® material.
Frame: Black Steel with Armortec® coating.

FIXING OPTIONS

We strongly recommend ground fixing for safety and security. Optional kits are available for surface fixing to concrete and paving slabs or to suit below-ground concrete foundations.
Tamper-resistant cover caps are also available.

SPECIFICATIONS

	Seat	Bench
Overall Length:	1790mm	1790mm
Depth:	632mm	460mm
Seat Height:	430mm	430mm
Overall Height:	790mm	430mm
Total weight including:		
Enviropol slats:	70kg	55kg
Timberpol slats:	78.5kg	56kg

Supplied fully assembled for immediate use.

Countryside™ Bench

Eco-Rest™ Seat & Bench

DESIGN FEATURES

- Environmentally friendly recycled materials.
- Vandal-resistant robust design.
- Weather-resistant - will not rot.

MATERIAL & COLOUR OPTIONS

Slats: Black Enviropol® material, Brown Enviropol material.
Frame: Black Steel with Armortec® coating.

FIXING OPTIONS

We strongly recommend ground fixing for safety and security. Optional kits are available for surface fixing to concrete and paving slabs or to suit below-ground concrete foundations.
Tamper-resistant cover caps are also available.

SPECIFICATIONS

	Seat	Bench
Overall Length:	1790mm	1790mm
Depth:	586mm	410mm
Seat Height:	435mm	422mm
Overall Height:	771mm	422mm
Weight:	60kg	55kg

Supplied fully assembled for immediate use.

Eco-Rest™ Bench

Traditional
FSC® Certified Hardwood Seating

Glasdon offer a range of wooden seats ideal for areas of natural beauty such as parks, gardens, nature reserves and in the countryside.

All our traditional seating originate from FSC® - certified plantations.

FSC® Certified Seating on pages 16-17

- Integrates well with natural surroundings.
- Traditional design, craftsman made.
- Perfect for tough environments.
- Hardwood from FSC - certified plantations.
- Hard wearing & long lasting.
- Complements other Glasdon street furniture.

FSC®
www.fsc.org
FSC® C023289

The mark of responsible forestry

Timber and the Environment

Timber is one of the world's few renewable natural resources and the long term interests of our forests are best served by actively supporting a well-managed timber industry which will always protect the forest from the threat of total clearance for agriculture.

What is FSC?

The Forest Stewardship Council® (FSC), founded in 1993, is an international, non-governmental organisation dedicated to promoting responsible management of the world's forests. It operates a system of forest certification and product labelling to identify wood from well-managed forests.

Forests are inspected by independent organisations and certified against strict standards. To be given FSC certification, a forest must be managed in an environmentally appropriate, socially beneficial and economically viable manner.

Only forests that meet these strict standards are then given FSC certification and the timber allowed to carry the FSC label.

For Glasdon traditional seating we use only those suppliers who can prove sensitivity to environmental considerations and who purchase responsibly sourced material.

All of our traditional seating products originate from FSC - certified plantations.

Larbreck™ Seat

DESIGN FEATURES

- Hard wearing seat with a high quality appearance.
- Fully sculpted back rails provide comfort.

MATERIAL

Constructed using generous sections of FSC® Certified Hardwood.

SPECIFICATIONS

Length:	1500mm
Depth:	640mm
Height:	980mm
Seat Height:	455mm
Weight:	35kg

Supplied fully assembled for immediate use.
(Dimensions for hardwood seating may vary.)

FIXING OPTIONS

We strongly recommend ground fixing for safety and security.
Optional kits are available for surface fixing to concrete and paving slabs.
Tamper-resistant cover caps are also available.

Norbreck™ Seat

The Norbreck seat is similar in design to the Larbreck seat, but incorporates flat instead of curved armrests.

Westby™ Seat

DESIGN FEATURES

- Designed to provide maximum comfort.
- Hard wearing and long lasting.

MATERIAL

Constructed using generous sections of FSC® Certified Hardwood.

SPECIFICATIONS

Length:	1500mm
Depth:	640mm
Height:	900mm
Seat Height:	455mm
Weight:	35kg

Supplied fully assembled for immediate use.
(Dimensions for hardwood seating may vary.)

FIXING OPTIONS

We strongly recommend ground fixing for safety and security.
Optional kits are available for surface fixing to concrete and paving slabs.
Tamper-resistant cover caps are also available.

Contemporary
Seating

Glasdon contemporary seating products are designed to co-ordinate with modern architecture and urban public open spaces and are ideal for town and city regeneration projects.

Choose from a wide selection of styles, colours and materials to compliment your indoor or outdoor environment.

Alturo™ Seat & Bench

Alturo™ Bench

DESIGN FEATURES

- Stylish, contemporary appearance.
- Vandal-resistant, robust design.
- Weather resistant, the Armortec® coating helps protect against weather damage.
- Choice of 4 colour schemes.
- Available with 2, 4 or no armrests.

MATERIAL & COLOUR OPTIONS

Aluminium with Armortec® coating.
Standard Colour Combinations:

Seat Pan & Back Rest	Seat Ends & Armrests
Black	Black
Silver	Black
Black	Dark Grey
Silver	Dark Grey

SPECIFICATIONS

	Seat	Bench
Length:	1715mm	1715mm
Depth:	550mm	430mm
Seat Height:	510mm	520mm
Overall Height:	875mm	520mm
Weight (without armrests):	31.9kg	20.3kg
Additional armrest weight:	1.5kg each	1.5kg each

Supplied fully assembled for immediate use.

FIXING OPTIONS

We strongly recommend ground fixing for safety and security.
Surface fixing bolts and tamper-resistant cover caps supplied as standard.
Optional kits are available for fixing to paving slabs or to suit below-ground concrete foundations.
Freestanding single or back-to-back fixing kits are also available for Alturo seat only.

Venturo™ Seat & Bench

Venturo™ Bench

DESIGN FEATURES

- Stylish, contemporary appearance.
- Vandal-resistant, robust design.
- Weather-resistant. the Armortec® coating helps protect against weather damage.
- Choice of 4 colour schemes.
- Available with 2 additional armrests.

MATERIAL & COLOUR OPTIONS

Seat Pan/Back Rest: Aluminium with Armortec® coating.
End Supports/Armrests: Steel with Armortec coating.
Standard Colour Combinations:

Seat Pan & Back Rest	Seat Ends & Armrests
Black	Black
Silver	Black
Black	Dark Grey
Silver	Dark Grey

SPECIFICATIONS

	Seat	Bench
Length:	1800mm	1800mm
Depth:	535mm	415mm
Seat Height:	475mm	500mm
Overall Height:	850mm	660mm
Weight (without armrests):	34.5kg	22.3kg
Additional armrest weight:	1.4kg each	1.4kg each

Supplied fully assembled for immediate use.

FIXING OPTIONS

We strongly recommend ground fixing for safety and security.
Surface fixing bolts and tamper-resistant cover caps supplied as standard.
Optional kits are available for fixing to paving slabs or to suit below-ground concrete foundations.

Carleton™ Perch Seat

DESIGN FEATURES

- Three sizes available - 600, 1200, 1800.
- Designed for wall-mounting as individual seating or beneath the Carleton™ Canopy.
- Choice of seat pan material.

MATERIAL & COLOUR OPTIONS

Manufactured using 100% recycled cast aluminium ends with Armortec® coating and a choice of 316 grade stainless steel, Black or Brown Enviropol® material or Timberpol® material for the seat pan.

FIXING OPTIONS

Supplied fully assembled ready for wall-mounting by our customers. Walls should be assessed for adequate strength and stability by a suitably qualified person. Tamper-resistant cover caps are also available.

SPECIFICATIONS

Model:	600	1200	1800
Length:	676mm	1276mm	1866mm
Depth:	216mm	216mm	216mm
Height:	305mm	305mm	305mm
Weights:			
Stainless Steel:	8kg	10kg	12kg
Enviropol:	13kg	22kg	31kg
Timberpol:	14kg	23kg	32kg

Recommended fixing height to the top of each seat above ground is 750mm.

Carleton Perch Seat Model 1800 c/w Stainless Steel seat pan. Co-ordinating Carleton Canopy and Ashmount SG® Cigarette Bin.

Children's
Seating

Glasdon offer a range of children's indoor and outdoor seating, from traditional styled seats, benches and picnic tables to fun novelty seating which encourages tactile play.

Ideal for any children's play area, these seating products are low maintenance, will not splinter and are highly robust.

Junior Countryside™ Seat, Bench & Picnic Table

DESIGN FEATURES

- Environmentally-friendly materials.
- Slats will not rust or splinter.
- Minimum maintenance.
- Vandal-resistant, robust design.

MATERIALS & COLOUR OPTIONS

Slats: Black or Brown Enviropol® material or Timberpol® material.
End Supports: Mild Steel with Armortec® coating.

SPECIFICATIONS

	Seat	Bench	Picnic Table
Overall Length:	1790mm	1790mm	1790mm
Overall Height:	562mm	372mm	610mm
Depth:	430mm	306mm	1006mm
Seat Height:	372mm	372mm	372mm
Depth of Table Top:	n/a	n/a	450mm
Total weight including:			
Enviropol slats:	52kg	30kg	98kg
Timberpol slats:	56kg	31.5kg	114kg

Supplied fully assembled for immediate use.

FIXING OPTIONS

We strongly recommend ground fixing for safety and security.
Optional kits are available for surface fixing to concrete and paving slabs or to suit below-ground concrete foundations.
Tamper-resistant cover caps are also available.

CO-ORDINATING PRODUCTS

The Junior Countryside™ range incorporates the stylish, modern design of the full size Countryside™ Seat & Bench (please see Page 13), offering a co-ordinated range of seating.

Munchy™ The Caterpillar Seat

DESIGN FEATURES

- Modular design can be expanded to add extra seating as required.
- No finger traps or sharp edges.
- Drainage slots ensure rainwater runs off quickly.

MATERIALS

Head/Body/Tail/Nose/Cover Caps: Durapol® material.
Eyes: Duratec™ material.
Fixings: Mild Steel.
Free Standing Feet: PVC.

SPECIFICATIONS

Overall Height (to top of head):	672mm
Seat Height:	352mm
Weights:	
Head:	5.9kg
Tail:	3.0kg
Body:	9.4kg
Standard Model:	27.7kg

FIXING OPTIONS

The Munchy seat can either be surface fixed using concrete anchor bolts or supplied with PVC feet for a free-standing application.
Sand ballasting is available for the free-standing option to provide additional security against unauthorised movement or theft.

Materials
& Further Information

Our seats and benches are available in different materials, from plastics, recycled material, steel and FSC® certified hardwood. Offering a number of colour options, from light and dark wood, metallics and coloured coating.

Glasdon seats and benches are co-ordinated with our wider range of street furniture including litter bins, outdoor recycling bins, bollards and shelters.

Enviropol® Material

Enviropol recycled material was first introduced by Glasdon in 1993 and is predominantly produced from post consumer and industrial polythene. As a subsequent result of government initiatives to increase the availability of segregated uncontaminated waste for recycling, there have been significant advances in the control and separation of recyclable waste. Glasdon can therefore maintain strict controls over the recycled waste materials used to formulate Enviropol material, which ensures that only those with the required physical properties are specified in the manufacture of our premium recycled product.
It is also 100% recyclable when it reaches the end of its service life.

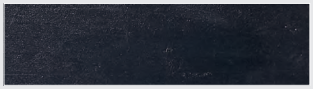
Black Enviropol

Brown Enviropol

Enviropol Material Benefits

The density, strength and weather-resistance of Enviropol material will ensure a long, virtually maintenance-free service life. It is self-coloured and needs no painting or surface treatment. The material is resistant to chemical attack and impervious to water, frost and most corrosive substances. Enviropol material is unaffected by brine, animal waste, bacteria, fungi and insects.

Everwood™ Material

Everwood material is a specially formulated blend of Durapol® material, which emphasises the grain-like appearance of timber. Unlike timber it requires no regular surface treatments such as staining or painting and the material will be unaffected by brine, bacteria, rot, mould and insects. Everwood is easy to clean, requires low maintenance and can be recycled at the end of its life.

Everwood

Like Durapol material, it has been formulated to withstand extremes of temperature and is impact-tested in our Quality Assurance Laboratory as part of our BS EN ISO 9001:2015 test procedure.

Timberpol® Material

Timberpol material is a durable and strong composite material containing a minimum 70% recycled hardwood sawdust and recycled polypropylene. It is a remarkably versatile product with many benefits.

Timberpol

Timberpol Material Benefits

A great advantage of Timberpol material is that whilst it looks like wood, it does not splinter and is knot-free, making it ideal for seating. It is self-coloured, but a certain amount of natural colour fading will initially occur as with all products containing timber. This does not affect the performance of Timberpol material and no painting or varnishing is ever required during its long working life.

Stainless Steel 316 Grade

Stainless Steel 316 grade (marine grade) is a highly durable and low-maintenance material. Even when located in areas of high salinity (e.g. coastal areas) it will exhibit only very slight evidence of corrosion.

No painting or coating is required, but the pristine appearance can be maintained by regular cleaning with warm soapy water. Any light staining that may occur on the surface can be removed with WD40 or an equivalent product. Alternatively, there are a number of proprietary stainless steel cleaners available. However, if used they must be low in chlorine or be spirit-based.

Armortec® Corrosion-Resistant Coating

All metal frame coatings are approved to the Glasdon Armortec coating standard for durability and life expectancy. If the coating is damaged by scratching, corrosion will not spread further than the immediate area.

Salt Spray and Impact Tests

The Glasdon post with Armortec coating lasted 5 times longer than the other sample.

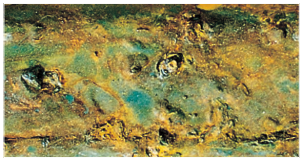
Without Armortec Coating

With Armortec Coating

Both mild steel post samples were subjected to repeated impact with a metal hammer. This was followed by six months in a salt spray cabinet in the Glasdon Quality Assurance Laboratory.

The salt spray cycle is a very aggressive test that accelerates the corrosion process and simulates long term weathering in an outdoor environment.

Durapol® Material

Durapol material is an extremely robust material, which makes it ideal for use in the manufacture of various products. Durapol material is a polymer formulated to withstand extremes of temperature and is impact-tested in our Quality Assurance Laboratory as part of our BS EN ISO 9001:2015 test procedure. Durapol material will not chip or rust, is easy to clean and never needs painting.

Available in a choice of self-coloured options, including Black which contains recycled material.

Vandalex® Material

Vandalex material is an aluminium alloy engineered to produce a high modulus of elasticity, which offers increased impact absorption properties. Its anodised finish will not rust, is easy to clean and never needs painting.

Base Fixing Options

Most Glasdon seating can be supplied with different fixing kits depending on requirements:

Surface fixing bolts for fixing to a concrete base

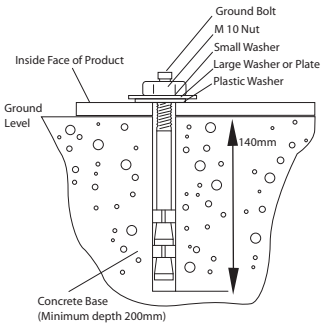

Fixing bolts for fixing to paving slabs

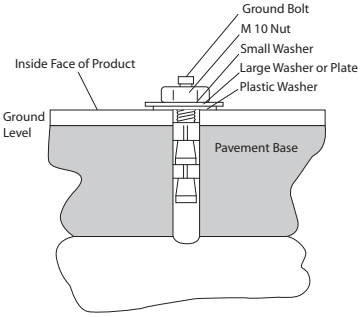

Fixing into concrete foundations using below ground anchors (for grass or other soft ground)

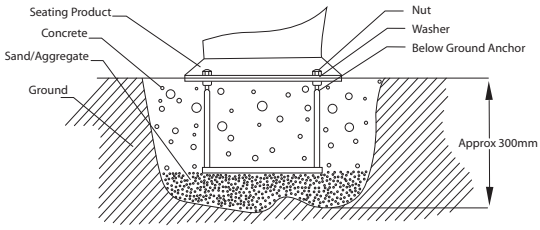

Adjustable depth concrete in anchors for casting into new concrete foundations

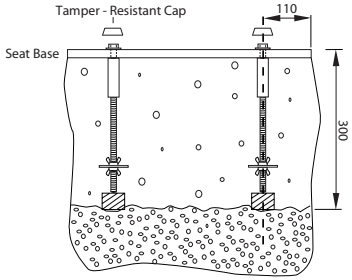

Self-tapping anchor bolt for fixing to a concrete base or paving slabs

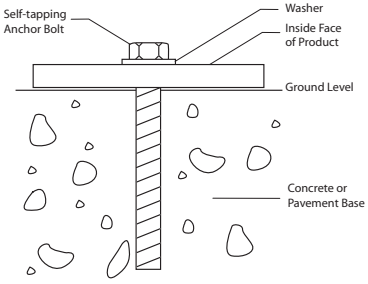

Strength & Durability

All seating within the Glasdon range is rigorously tested by our in-house Quality Assurance Department for strength and durability, to ensure maximum protection against vandals and the elements.

We have accreditation with ISO 9001:2015 & ISO 14001, underlining our commitment to quality.

Certificate Number 16750
ISO9001, ISO14001, ISO45001

** The fixings supplied may differ from those illustrated.*

Co-ordinating Products

Many of the Glasdon seats and benches can be co-ordinated with litter bins and bollards within the full Glasdon product range.

Elwood™ Seat with co-ordinating Sherwood™ Litter Bin and Glenwood™ Posts.

Stanford™ Seat with co-ordinating Brunel™ Litter Bin.

Fusion™ Seat with co-ordinating Fusion™ Litter Bin.

Commemorative Plaques
& Personalisation

A memorial seat is a thoughtful way to remember someone. Glasdon offer a wide selection of indoor and outdoor seats which can be personalised with a commemorative plaque that is laser etched with any dedication you would like.

Memorial Seating and Commemorative Plaques

The majority of Glasdon seats can be supplied with a stainless steel plaque that is laser etched with any dedication you would like.

The plaques are usually 150mm wide and 50mm high (plaques on the Lowther™ Seat and Stanford™ Seat are limited to 40mm high), though 200mm long plaques can be used if needed. Laser etching allows much greater flexibility for your message – alternative engraving methods are generally stuck to a fixed font and a maximum number of characters, but with laser etching we can even include simple graphics. We can also fit multiple plaques to the same seat if needed.

Some local authorities run their own schemes for the centralised purchase of memorial seats. If you would like your seat to be located on public land (such as parks, beachfronts, or cemeteries/memorial gardens), you should always contact your council to discuss whether your idea is permitted. Many authorities require specific Glasdon seats to be used – popular choices are the Stanford Seat or the Phoenix® Seat, which are extremely hard wearing and require almost no maintenance. Local authorities will frequently handle the ordering process for you, arranging to receive delivery and install the seat at your agreed location.

When you order your memorial seat from Glasdon, we will take the wording and produce a computer visual that will be posted or e-mailed to you before we produce the plaque to make sure it is exactly what you want. When it is, sign the approval sheet and send it back to us, and we will have the plaque engraved as quickly as possible. The ordering process usually takes 4-6 weeks from beginning to end.

Decorative Crest Personalisation

Stanford Seat and Bench
Personalised polycarbonate plaques can be supplied to fit the rectangular recessed area on each Stanford Seat and Bench ends. In addition to this, a circular polycarbonate plaque can be fitted to the Stanford Seat. This can also be personalised with your name, message or logo.

Lowther Seat
The Lowther Seat can be personalised with graphics on the rectangular recessed area on the seat ends. In addition to this, a circular mild-steel plaque can be fitted to the Lowther Seat and personalised with your crest or logo.

For more information on this service, including prices, please telephone our Sales Office on 01253 600410.